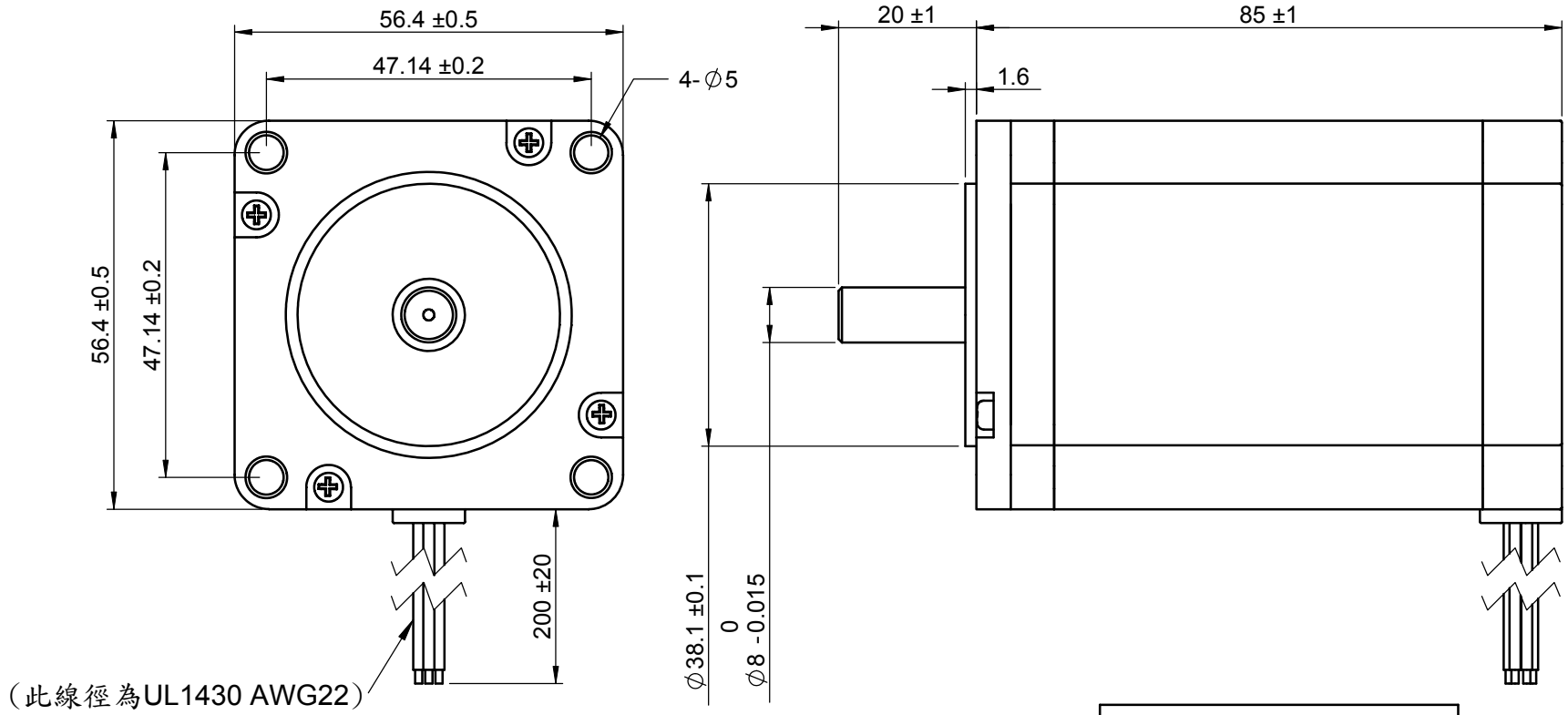

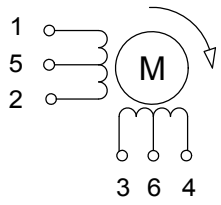

CONNECTOR PIN LOCATION					
PIN	COLOR	CCW ⟵ ⟶ CW			
1	BLACK	+	-	-	+
5	YELLOW	-	+	+	-
3	RED	+	+	-	-
6	WHITE	-	-	+	+
2	GREEN				
4	BLUE				

註：以雙極性驅動板測試

MODEL		Motor Characteristics					
JH57-I0S1A783		Resistance	Step Angle	Steps Revolution	Max PIT Rate	Max POT Rate	POT(at200pps)
Constant current	40V 3A	0.7Ω	1.8 °	200	300PPS	9000PPS	11.5kg-cm

THIRD ANGLE PROJECTION	製圖	JOANNE	Cheshire Electric Company,LLC	
ALL DIMENSION ARE IN MM (UNLESS OTHERWISE SPECIFIED)	設計		Part No JH57-I0S1A783	
	審核	Adam		
	材料		Name HB stepper motor	REV. NO. A
繪製比例： 1:1	完成時間	2012/3/13		